FIRE HYDRANT NOTES:

1. FIRE HYDRANTS SHALL BE INSTALLED AS STAKED. THE DISTANCE FROM THE WATER MAIN TO THE FIRE HYDRANT VARIES. THE CONTRACTORS BID PRICE FOR FIRE HYDRANT ASSEMBLIES SHALL BE BASED ON AVERAGE DISTANCE OF 15' FEET.
2. COSTS TO INSTALL THE FIRE HYDRANT TO GRADE SHALL BE PAID BY THE CONTRACTOR.
3. ALL FITTINGS SHALL BE MECHANICALLY RESTRAINED.
4. TOP OF VALVE BOX AND COLLAR SHALL BE PAINTED AS DIRECTED BY ENGINEER.

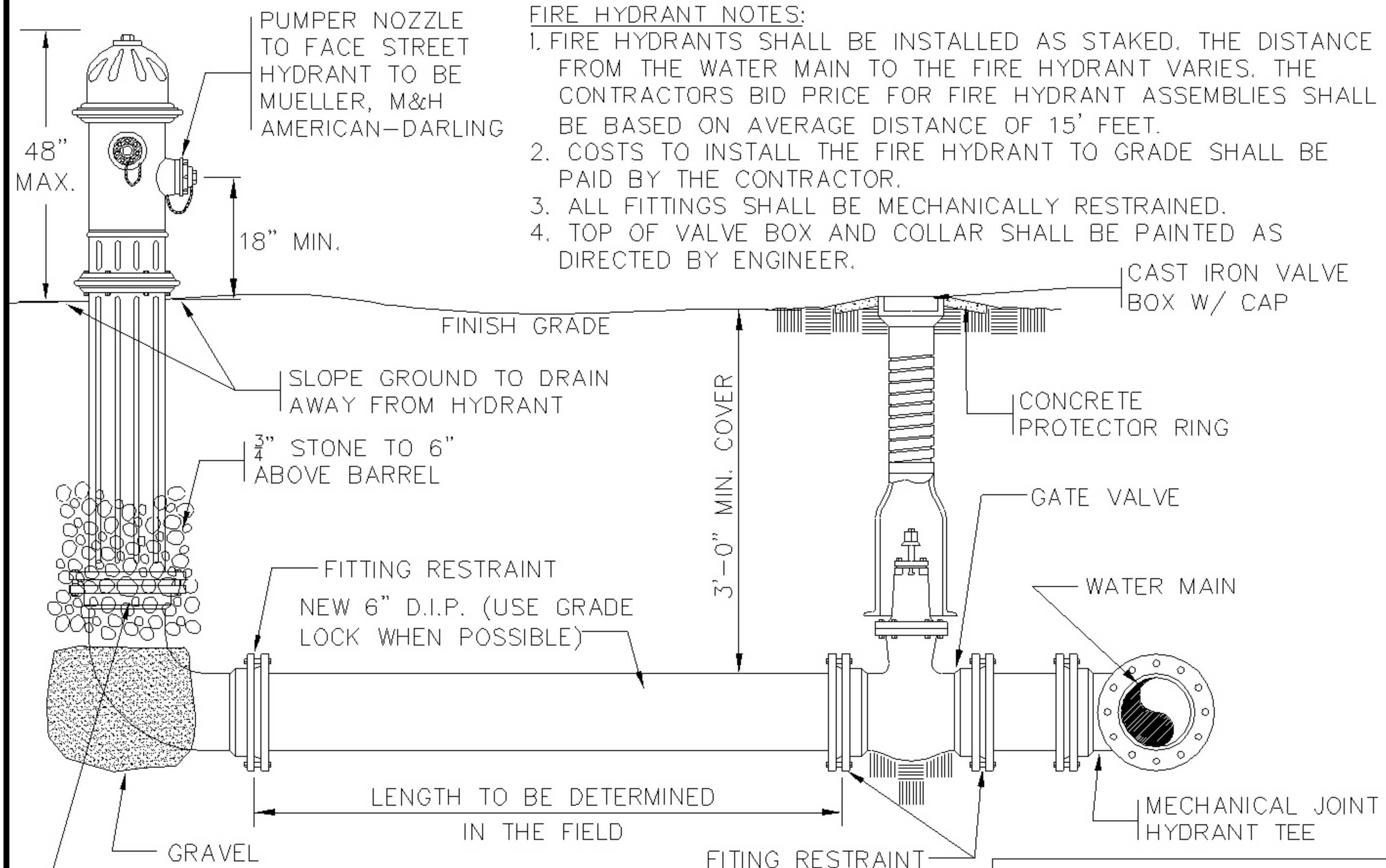

CLEAR WEEP HOLE BEFORE INSTALLATION DO NOT FILL W/ CONCRETE

NOTE:
DISTANCE AND DIRECTION TO VALVE TO BE STAMPED INTO METAL ON THE BONNET

FIRE HYDRANT AND VALVE DETAIL

N.T.S.

LANCASTER COUNTY WATER & SEWER DISTRICT	
LAYOUT TITLE: FIRE HYDRANT AND VALVE	
CATEGORY: WATER	
DATE: 01/06	SCALE: NONE
DETAIL SHORTNAME: FHYD	SHEET: W1

NOTE:

1. EXTENSION STEM WILL BE REQ'D. TO BE WITHIN 2' OF THE SURFACE IF OPERATING NUT IS OVER 5' BELOW GRADE EXTENSION SHALL BE PERMANENTLY ATTACHED TO VALVE NUT AND SHALL BE PROVIDED WITH HORIZONTAL SPACERS FOR VERTICAL ALIGNMENT WITHIN THE VALVE BOX.
2. TOP OF VALVE BOX AND COLLAR SHALL BE PAINTED BLUE FOR MAIN LINE VALVES, RED FOR HYDRANT VALVES.
3. 14 GAGE TRACER WIRE TO BE ACCESSIBLE. STRANDED COPPER COATED

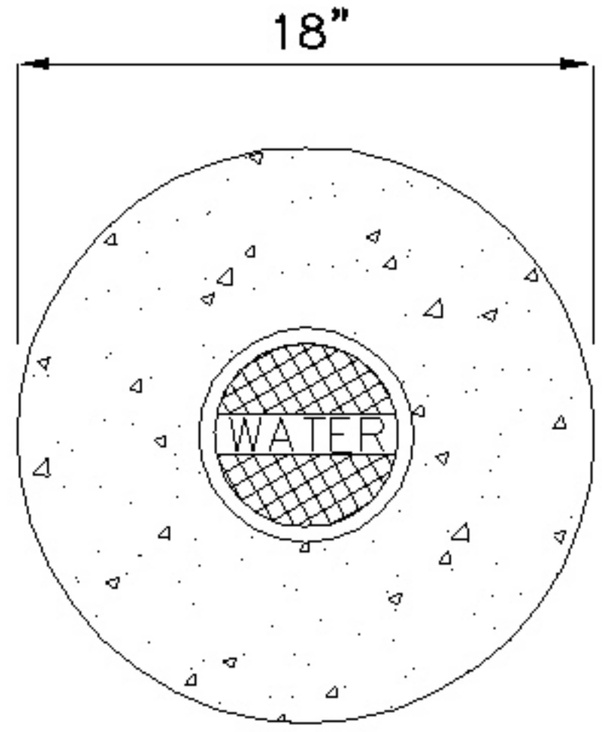

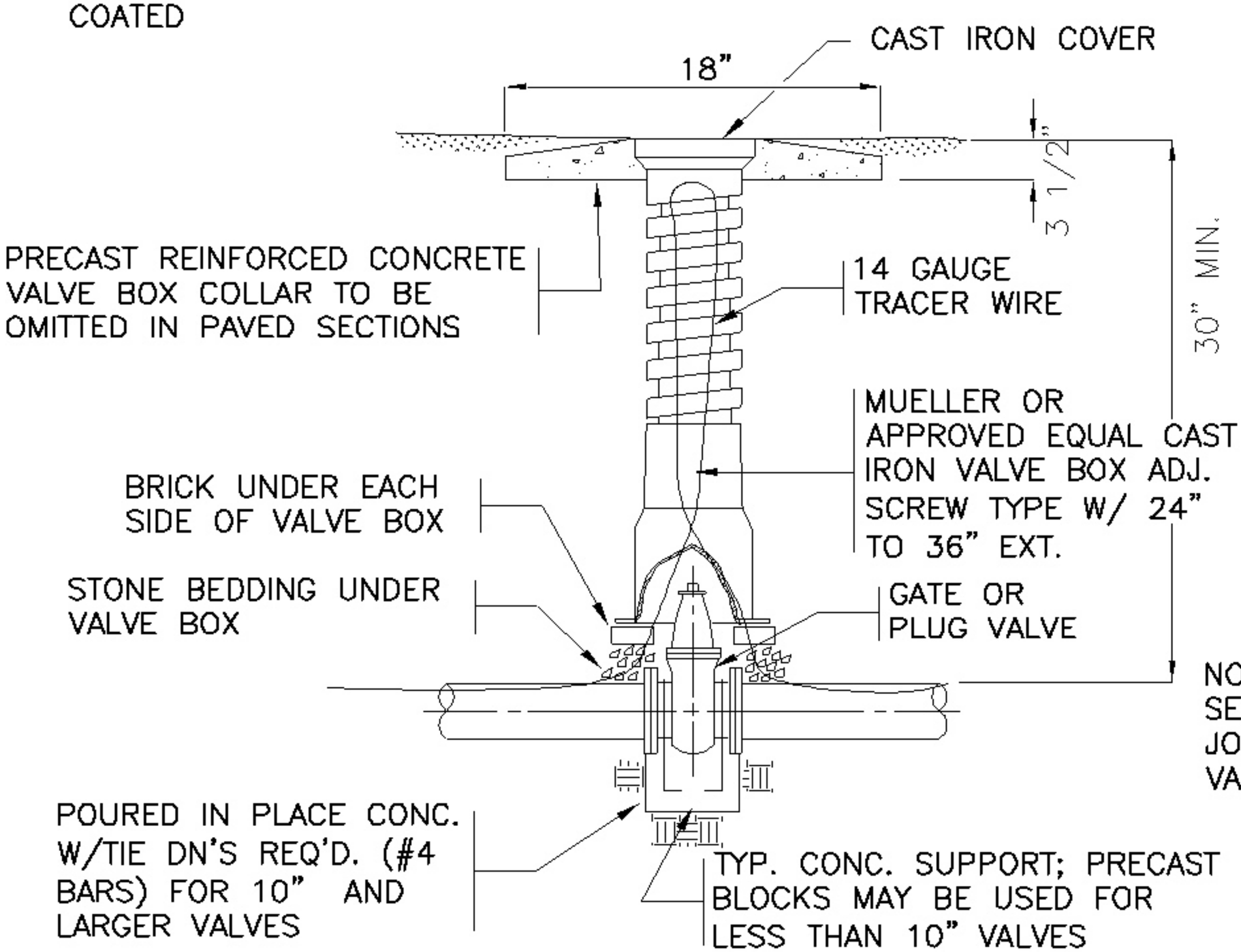

NOTE:
SEE TYPICAL FITTING AND JOINT RESTRAINT DETAILS FOR VALVE RESTRAINTS.

TYPICAL VALVE AND VALVE BOX

N.T.S.

LANCASTER COUNTY WATER & SEWER DISTRICT	
LAYOUT TITLE: TYP. VALVE AND VALVE BOX	
CATEGORY: WATER	
DATE: 01/06	SCALE: NONE
DETAIL SHORTNAME: VALBX	SHEET W2

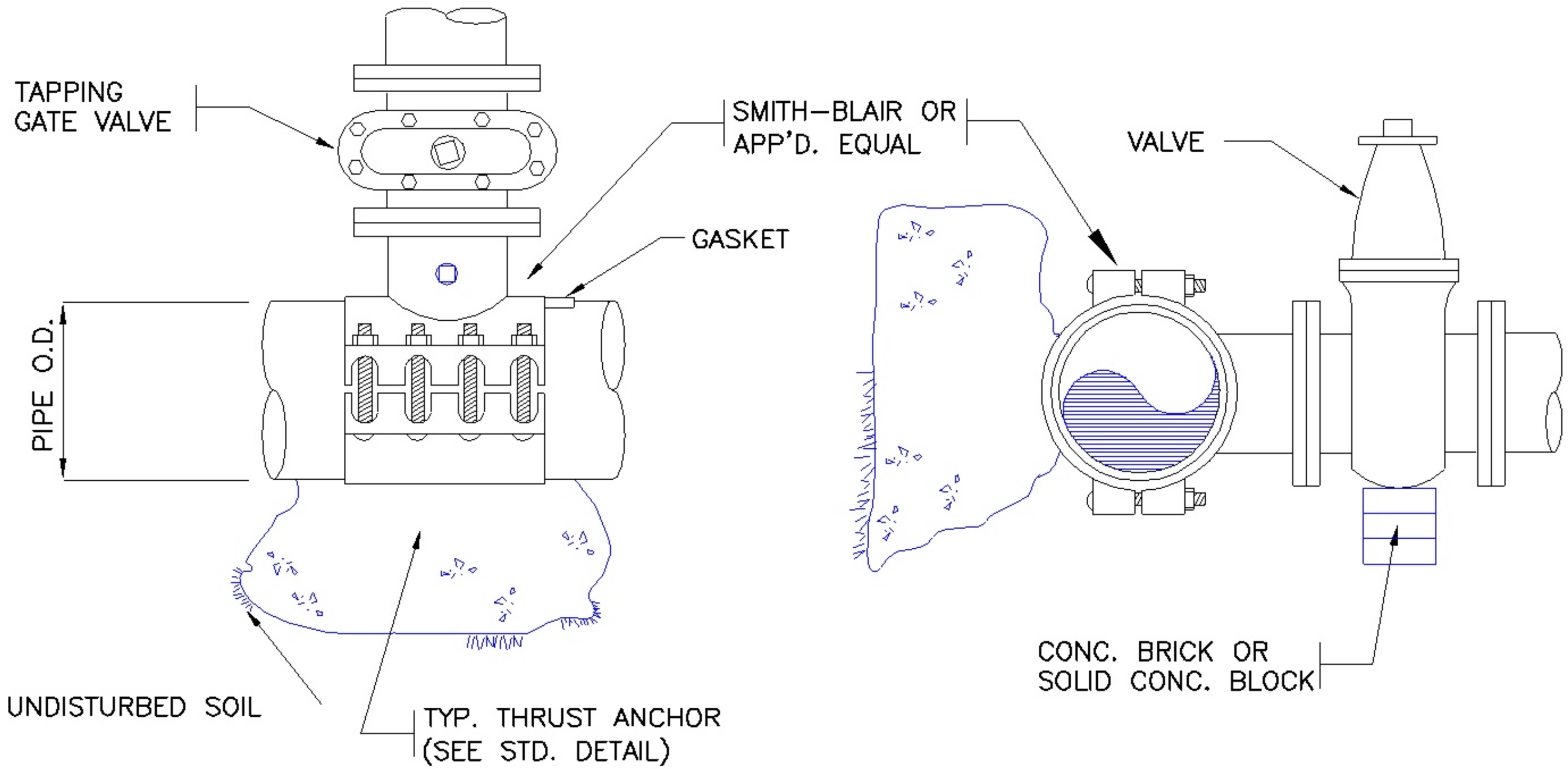

TAPPING SLEEVE AND VALVE

N.T.S.

LANCASTER COUNTY WATER & SEWER DISTRICT	
LAYOUT TITLE: TAPPING SLEEVE AND VALVE	
CATEGORY: WATER	
DATE: 01/06	SCALE: NONE
DETAIL SHORTNAME: TSLVAL	SHEET W3

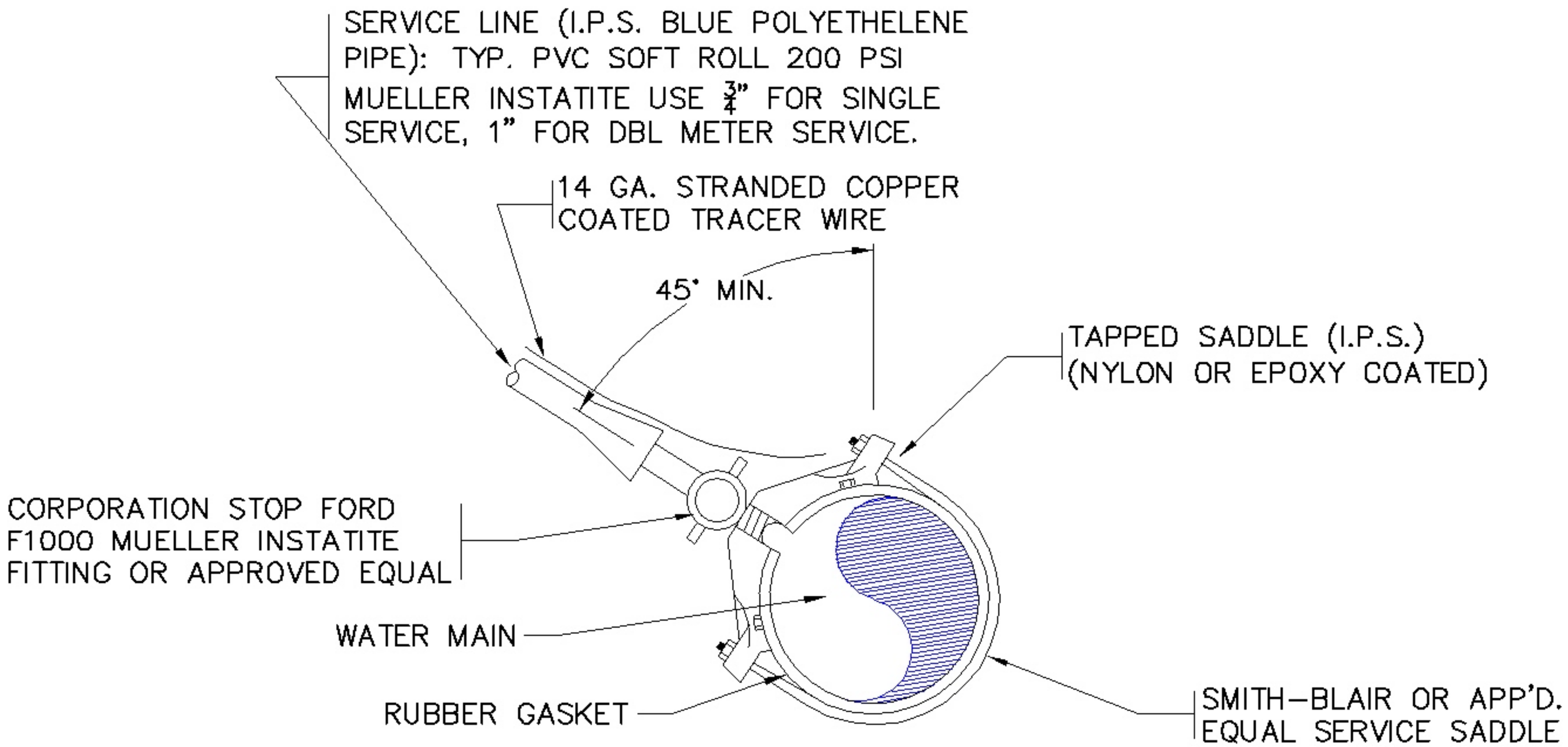

TYPICAL SERVICE TAP

N.T.S.

NOTE:
SINGLE SST STRAP SADDLE FOR WATER MAINS 4" & LESS. DBL. SST STRAP SADDLE FOR WATER MAINS LARGER THAN 4".

LANCASTER COUNTY WATER & SEWER DISTRICT	
LAYOUT TITLE: TYPICAL SERVICE TAP	
CATEGORY: WATER	
DATE: 01/06	SCALE: NONE
DETAIL SHORTNAME: SERVTAP	SHEET W4

NOTE: INSTALL 14 GAUGE STRANDED TRACER WIRE INSIDE METER BOX

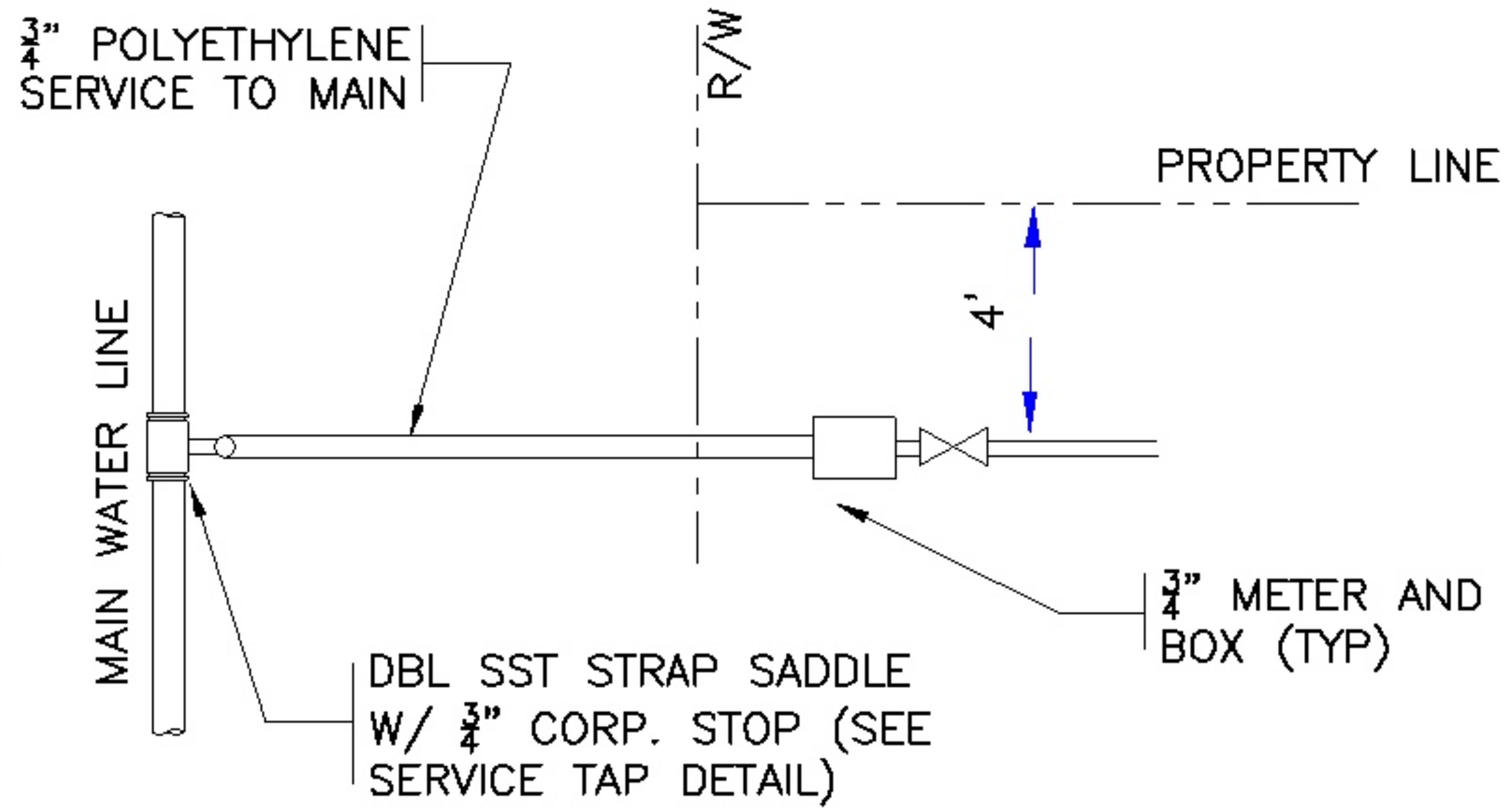

NOTE: USE NYLON OR EPOXY COATED SADDLE.

TYPICAL SINGLE SERVICE CONNECTION

N.T.S.

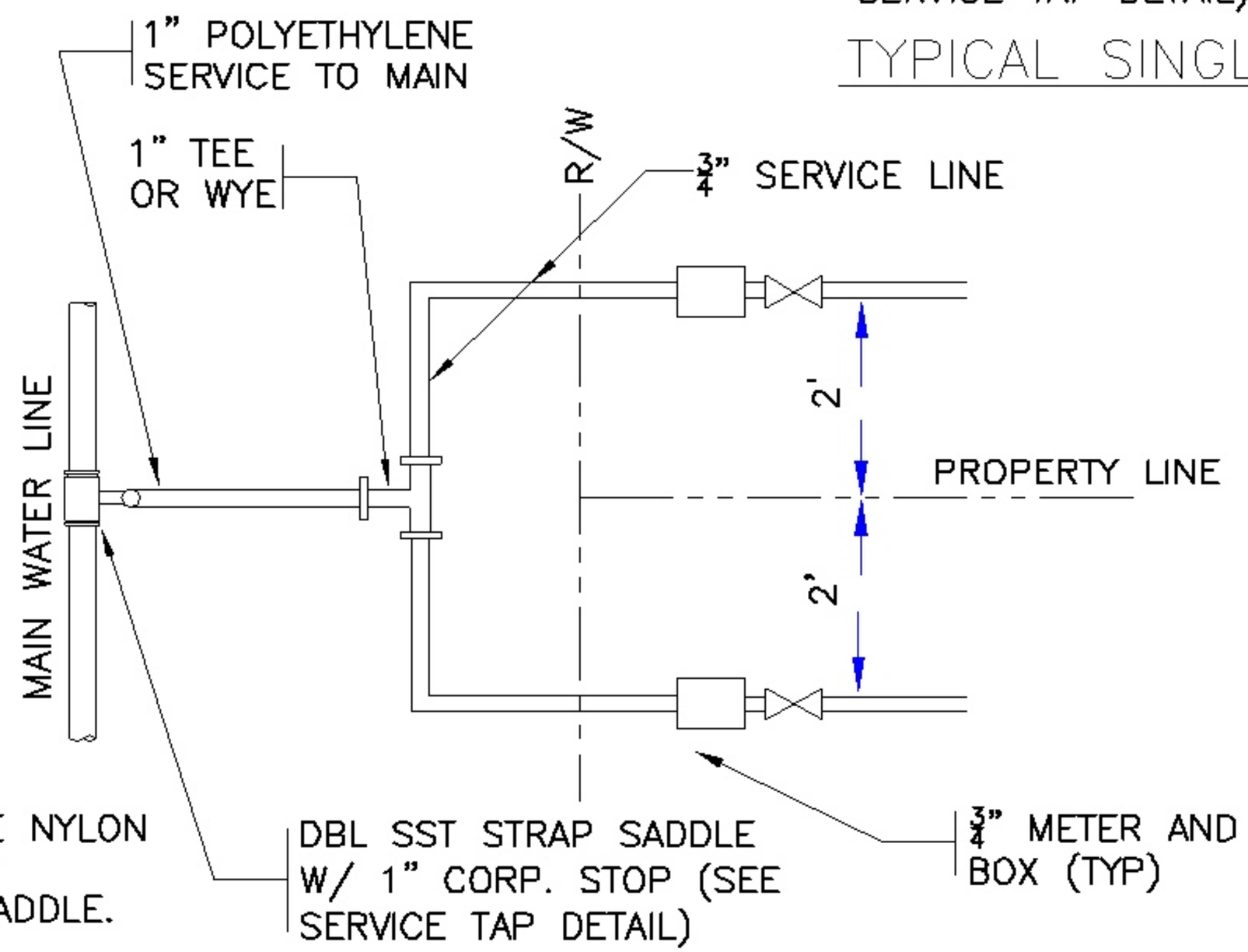

NOTE: LCW&SD PERSONNEL TO INSTALL METERS AT A LATER TIME. (FOR MULTI-FAMILY PUPOSES ONLY)

NOTE: USE NYLON OR EPOXY COATED SADDLE.

TYPICAL DOUBLE SERVICE CONNECTION

N.T.S.

LANCASTER COUNTY WATER & SEWER DISTRICT	
LAYOUT TITLE: TYPICAL SERVICE CONNECTION	
CATEGORY: WATER	
DATE: 01/06	SCALE: NONE
DETAIL SHORTNAME: SERCON	SHEET W5

NOTES:
1. INSTALL MARKER POSTS ON EDGE OF THE PROPOSED WATER MAIN EASEMENT.
2. PROVIDE MARKER POSTS AT ALL VALVES.
3. ABBREVIATIONS STAMPED ON POST AS FOLLOWS:
   VALVES AND BLOWOFF ASSEMBLIES, FACING VALVE
   MV = MAIN VALVE
   BO = BLOW OFF VALVE
   PC = PERMANENTLY CLOSED
   ARV = AIR RELIEF VALVE

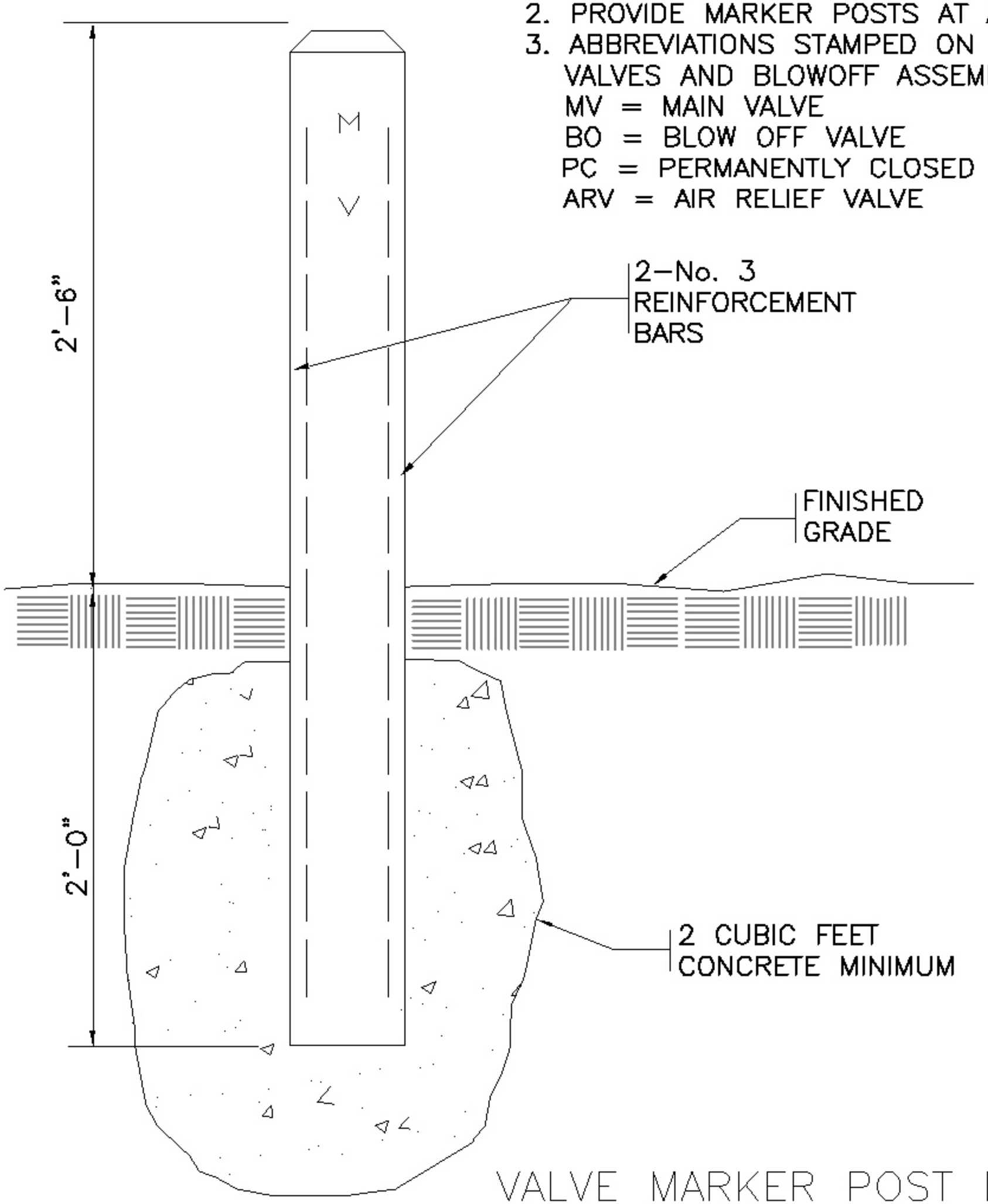

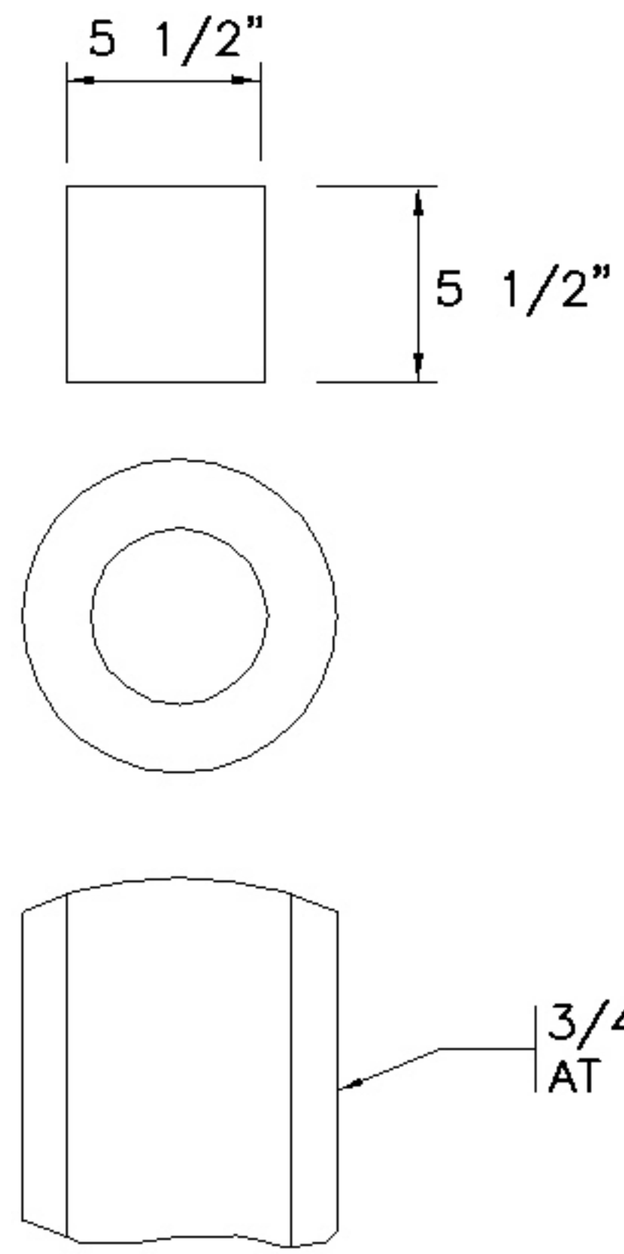

VALVE MARKER POST DETAIL
N.T.S.

LANCASTER COUNTY WATER & SEWER DISTRICT	
LAYOUT TITLE: TYPICAL VALVE MARKER POST	
CATEGORY: WATER	
DATE: 01/06	SCALE: NONE
DETAIL SHORTNAME: VALMARK	SHEET W6

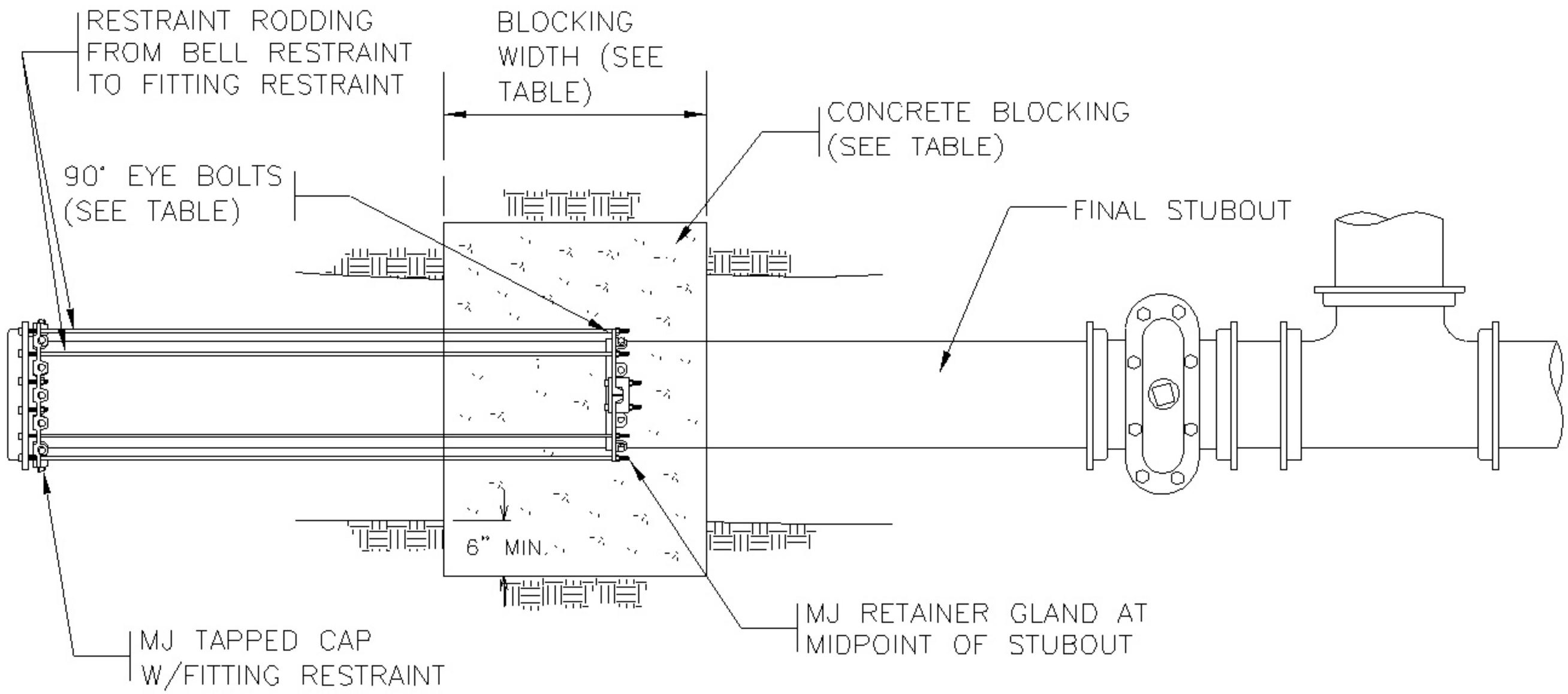

MINIMUM BLOCKING DIMENSIONS			
PIPE SIZE (inches)	BLOCKING BEARING AREA (ft^2)	BLOCKING WIDTH (inches)	# EYE BOLTS
4	2	24	4
6	4	24	4
8	7	36	6
10	11	36	6
12	15	36	6
OVER 12" BY THE DESIGN ENGINEER			

NOTE:
THE MINIMUM DIMENSIONS TABLE IS BASED ON AN ASSUMED SOIL BEARING OF 2000 LBS. PER SQ. FT. IF BEARING VALUE FOR SOIL IS LESS, THEN AREA SHOWN HEREIN SHOULD BE INCREASED ACCORDINGLY.

TYPICAL FUTURE WATERLINE STUBOUT

N.T.S.

LANCASTER COUNTY WATER & SEWER DISTRICT

LAYOUT TITLE: FUTURE WATERLINE STUBOUT	
CATEGORY: WATER	
DATE: 01/06	SCALE: NONE
DETAIL SHORTNAME: FUTSTUB	SHEET W7

NOTES: 14 GAUGE TRACER WIRE (STRANDED)
TO BE ACCESSABLE IN VALVE BOX.

GALVANIZED PIPE SHALL NOT BE USED

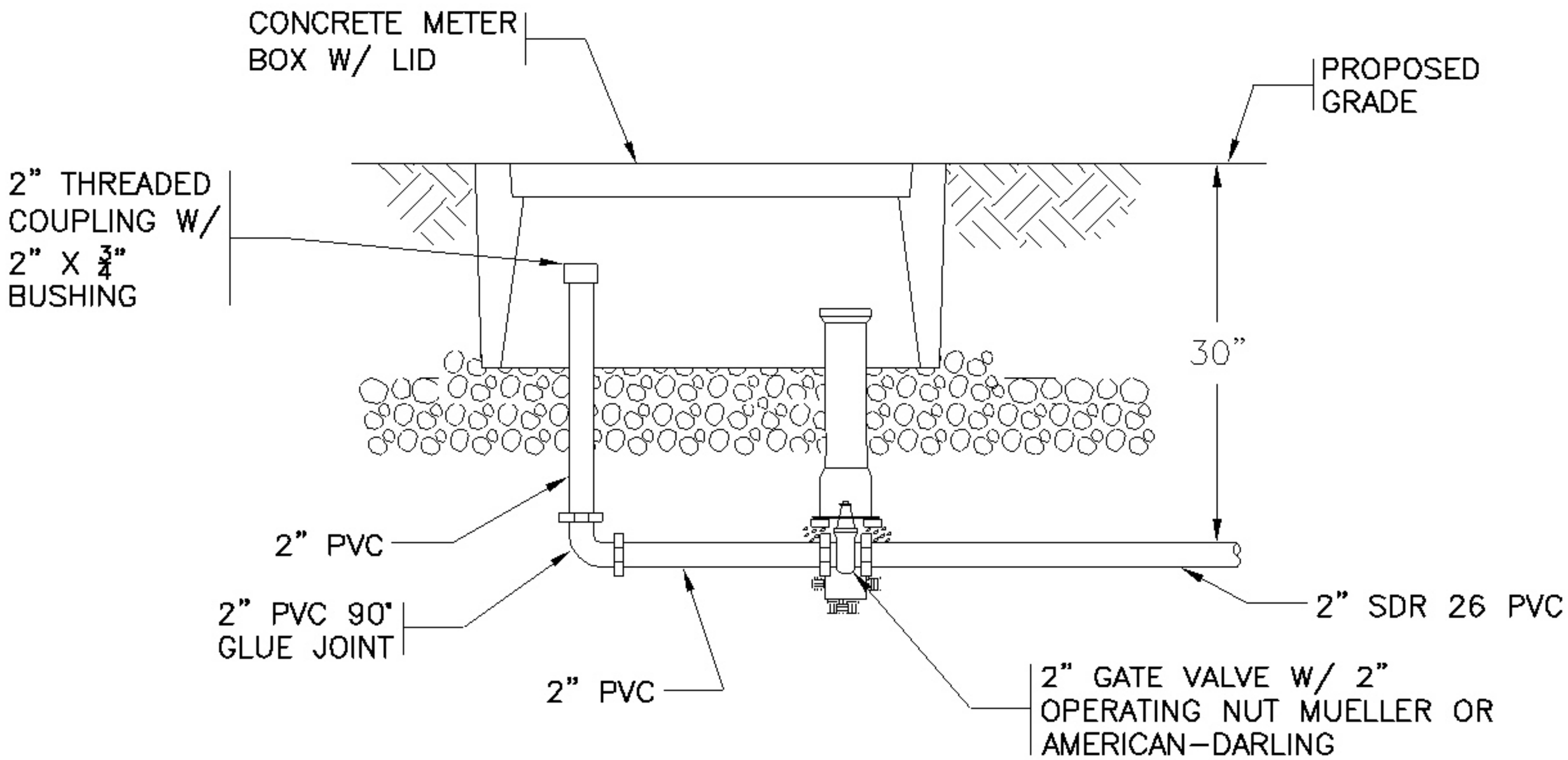

PIPE DIA. (IN.)	ORIFICE (IN.)
2	0.75
2.5	1
3	1.25
4	1.5
6	2

2" BLOWOFF ASSEMBLY

N.T.S.

LANCASTER COUNTY WATER & SEWER DISTRICT

LAYOUT TITLE: TYPICAL BLOWOFF DETAIL	
CATEGORY: WATER	
DATE: 01/06	SCALE: NONE
DETAIL SHORTNAME: BLOWOFF	SHEET W8

MODEL NUMBERS FOR
COPPERSETTERS
MUELLER: B2434R-6A
McDONALD: 28-207WDPP33
FORD: VBHC72-9W-MM-33

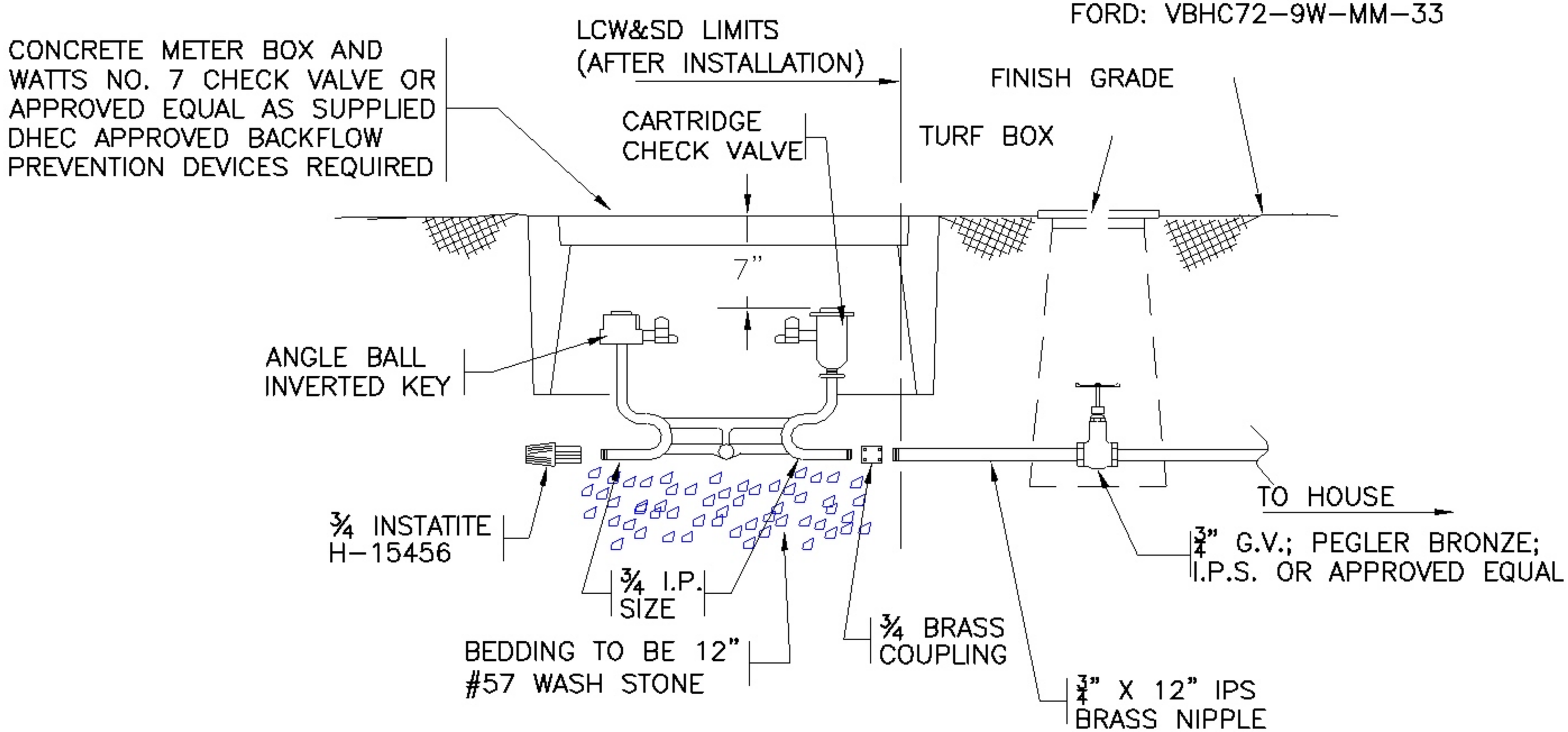

NOTES:

1. METER WILL BE A $\frac{5}{8}$"x$\frac{3}{4}$" POSITIVE TYPE DISPLACEMENT METER CONFORMING TO AWWA SPEC'S. C700-71 KENT ALL BRONZE METER OR APPROVED EQUAL.
2. CONTRACTOR TO PROVIDE FINAL SETTING TO FINAL PROPERTY GRADE, ALL METER YOKEBOXES AND SERVICE MATERIAL PRIOR TO LCW&SD SETTING FINAL WATER METER.
3. GATE VALVE AND TURF BOX SUPPLIED BY CONTRACTOR.
4. CONTRACTOR RESPONSIBLE FOR DISTANCE BETWEEN METER SETTER AND INSIDE OF LID, A MIN. OF 7 INCHES UNTIL METER HAS BEEN SET.

TYPICAL METER BOX

N.T.S.

LANCASTER COUNTY WATER & SEWER DISTRICT	
LAYOUT TITLE: TYPICAL METER BOX DETAIL	
CATEGORY: WATER	
DATE: 01/06	SCALE: NONE
DETAIL SHORTNAME: METERBOX	SHEET W9

NOTES:

1) AIR RELEASE VALVE SHALL BE INSTALLED ON THE HIGH POINT OF WATER MAIN.
2) ALL MATERIALS & EQUIPMENT TO BE PER AWWA SPEC'S.
3) AIR RELEASE SHALL BE APCO MODEL 55 OR APPROVED EQUAL
4) CORP. STOP, BRASS PIPE, FITTINGS, AND ANGLE VALVE TO BE SAME DIA. AS AIR RELEASE VALVE INLET.
5) LIMIT OF PAY ITEMS INCLUDES SERVICE SADDLE.

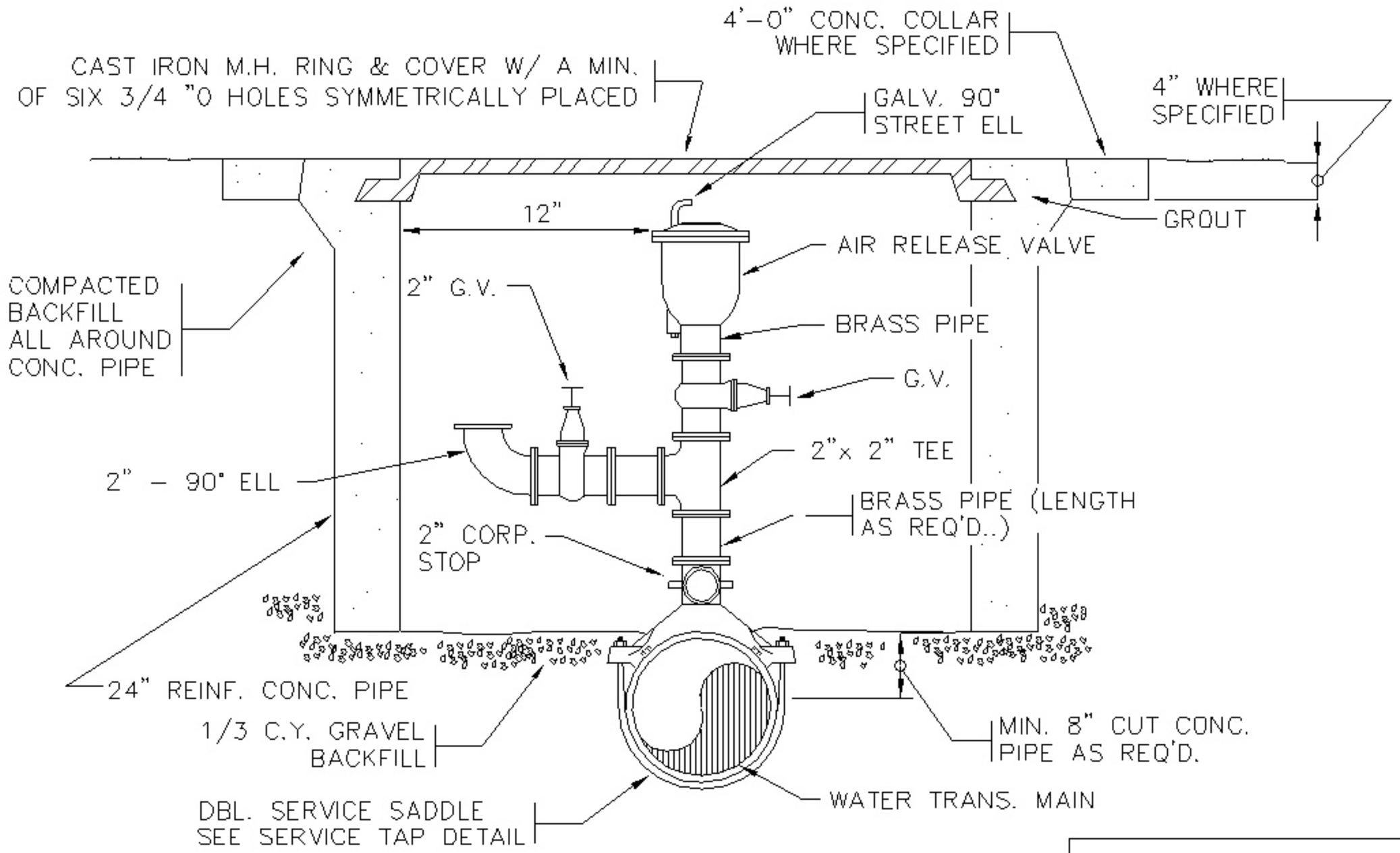

AIR RELEASE VALVE ASSEMBLY

N.T.S.

LANCASTER COUNTY WATER & SEWER DISTRICT	
LAYOUT TITLE: AIR RELEASE VALVE ASSEMBLY	
CATEGORY: WATER	
DATE: 01/06	SCALE: NONE
DETAIL SHORTNAME: ARVA2	SHEET S10

NOTES:

1) AIR RELEASE VALVE SHALL BE INSTALLED ON THE HIGH POINT OF WATER MAIN.
2) ALL MATERIALS & EQUIPMENT TO BE PER AWWA SPEC'S.
3) AIR RELEASE SHALL BE APCO MODEL 55 OR APPROVED EQUAL
4) CORP. STOP, BRASS PIPE, FITTINGS, AND ANGLE VALVE TO BE SAME DIA. AS AIR RELEASE VALVE INLET.
5) LIMIT OF PAY ITEMS INCLUDES SERVICE SADDLE.

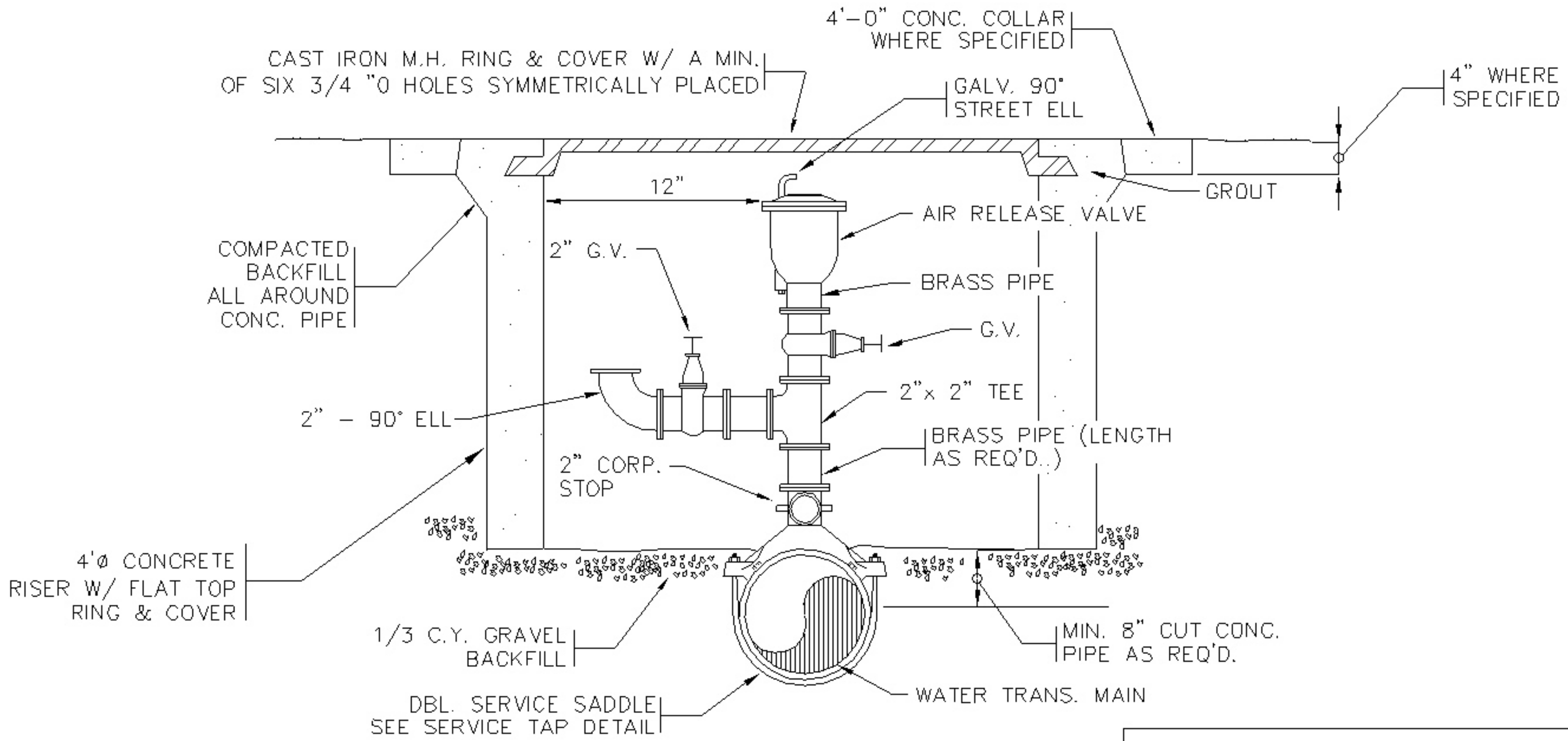

AIR RELEASE VALVE ASSEMBLY

N.T.S.

LANCASTER COUNTY WATER & SEWER DISTRICT	
LAYOUT TITLE: AIR RELEASE VALVE ASSEMBLY	
CATEGORY: WATER	
DATE: 01/06	SCALE: NONE
DETAIL SHORTNAME: ARVA2	SHEET S11